ROYAL® Trim & Mouldings

Build™

DO IT YOURSELF

Garden Bench

Skill Level	Estimated Cost	Time	Download PDF
	$$$$	1 Day	

Garden Bench

This Garden Bench is a great addition to any pond or outdoor space. The bench is designed for children, but additional pads (feet) can add enough height for comfortable sitting at any age. We also incorporated aluminum bars in the seat to eliminate undo flex and add strength to the build. The simulated jointer eliminates the need for cross bracing to create a clean, simple aesthetic.

Drawing - Layout

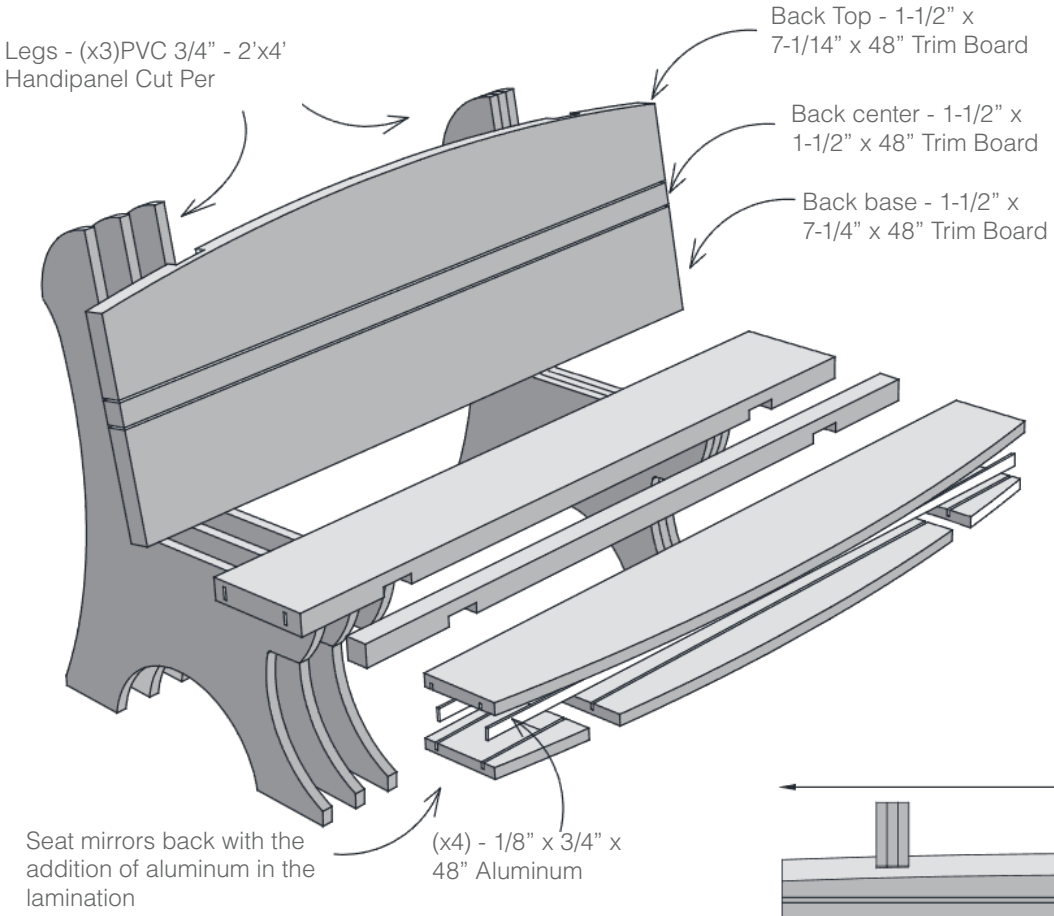

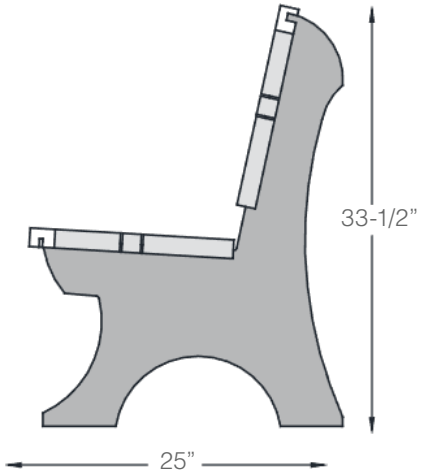

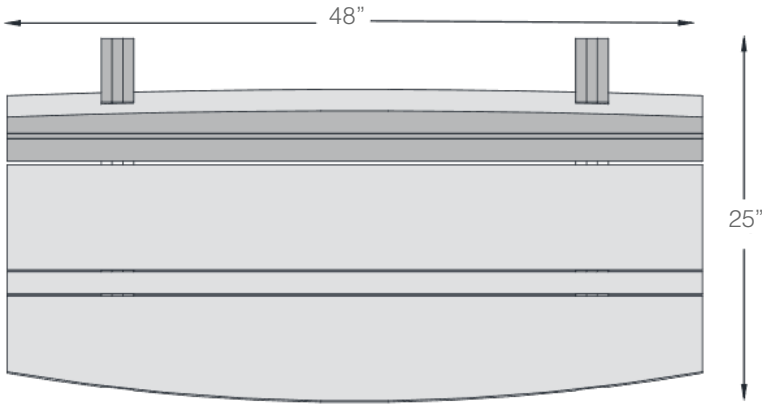

Drawing - Materials

Tools

- Hearing Protection
- Safety Glasses
- Drill Bits
- Power Miter Saw
- Drill / Driver
- Jig Saw
- Table Saw or Circular Saw
- Tape Measure

Materials

- 2ea - 2’ x 4’ x 3/4’ Handipanel
- 4ea - 1” x 8” x 8’ Royal Trim Board
- 2ea - 1” x 2” x 8’ Royal Trim Board
- 20ea - Cortex Plug and screw fasteners
- 2ea - 1/8” x 3/4” x 8’ aluminum bar
- PVC Glue
- Optional - white acrylic latex paint

Legs - (x3) PVC
3/4” - 2’ x 4’
Handi Panel

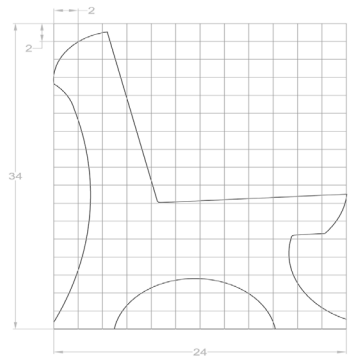

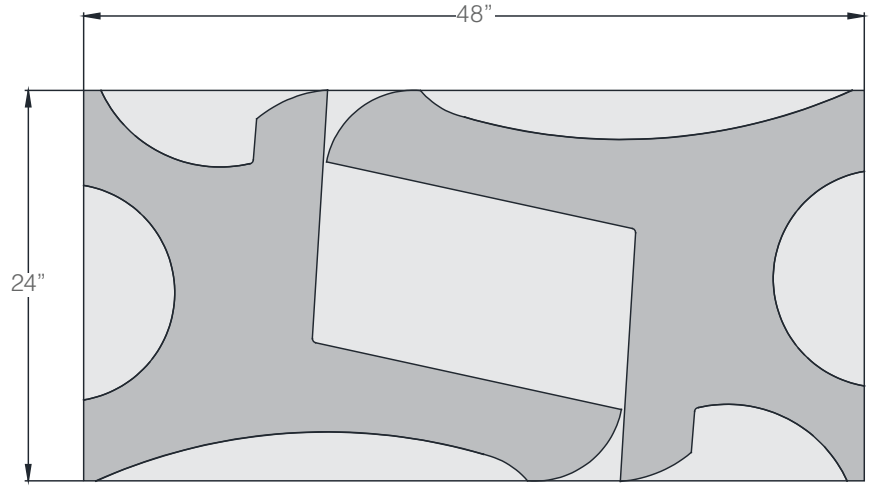

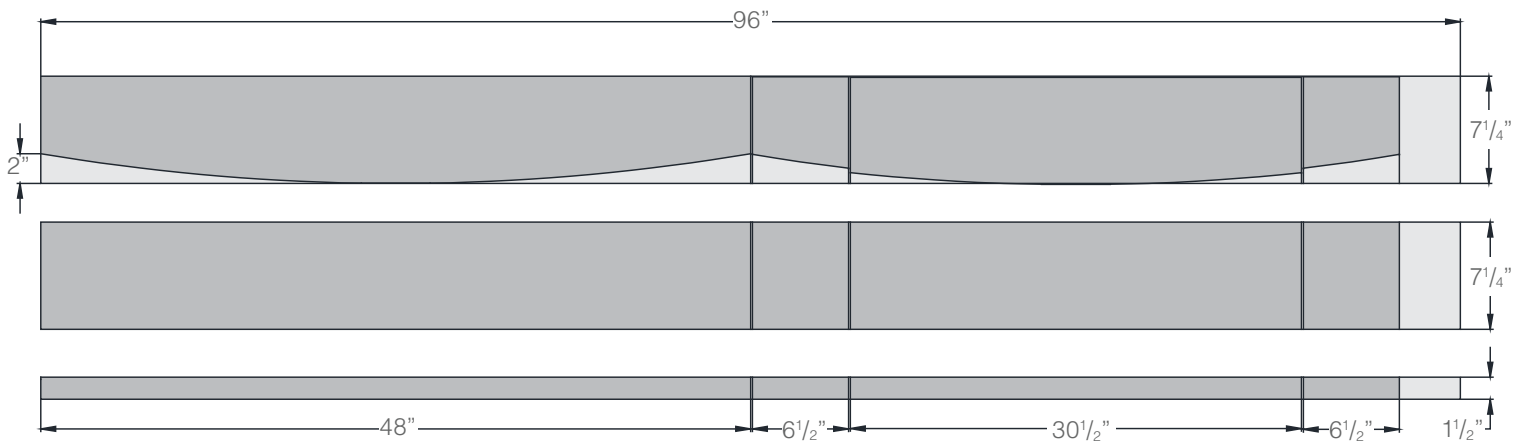

Step 1: Cut Bench Parts

1.1 – Scale Design

Use the provided PDF of the legs to scale the image to a piece of poster board {24”x34”). This technique has been used in the industry for years, but if you’re not familiar, here a few articles/videos on how to scale a drawing:

https://www.youtube.com/watch?v=jCbsTj3lzk8

https://www.woodmagazine.com/woodworkinghow-to/layout-measuring-marking/how-to-enlarge-gridded-patterns

https://www.woodworkersjournal.com/video-how-to-enlarge-gridded-drawings/

1.2 – Layout and Cut

The legs are designed to fit two per handi panel (2’X4’) as illustrated in the cut photo. For a smooth (non-wood grain) finish layout two panels with the smooth side up and one panel with the grain up. Rough cut the blanks with a jig saw and leave enough material to trim to final shape.

1.3 – Sand to Shape

Sand one of the panels to the finial shape. This is only required for the initial panel.

1.4 – Secure two panels

Temporally fasten two panels to allow for routing with a tracer / pattern cutting bit. This will make the master template for each leg.

Scale Design

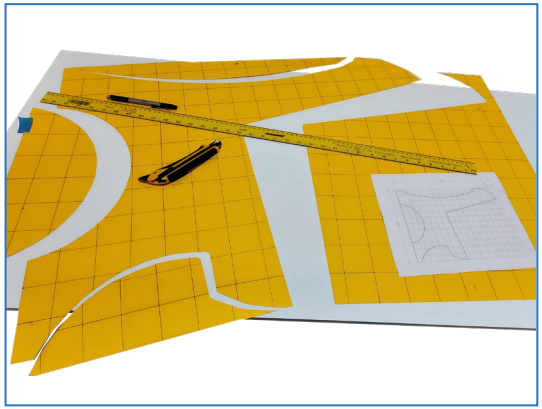

Layout and Cut

Sand to Shape

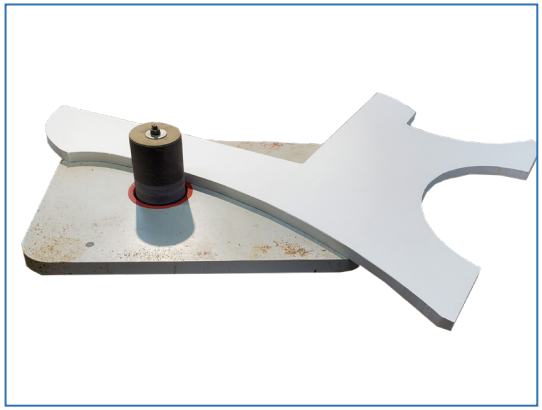

Secure two Panels

Step 1: Cut Bench Parts

1.5 – Route to size

Using a flush cut bit, size the rough cut blank to the sanded finished leg blank.

1.6 – Centers of lamination

These properly shaped legs will be used to complete the lamination and shape the additional parts.

1.7 – Lamination

PVC glue the mating parts to both sides of the centers and clamp. Ensure the proper sides are exposed (smooth/embossed)

NOTE: the PVC glue will soften the material for a number of days, so be careful around the edges to not encounter squeeze out.

1.8 – Trim to size

Use the flush cut bit to trim the lamination to shape.

Route to Size

Centers Established

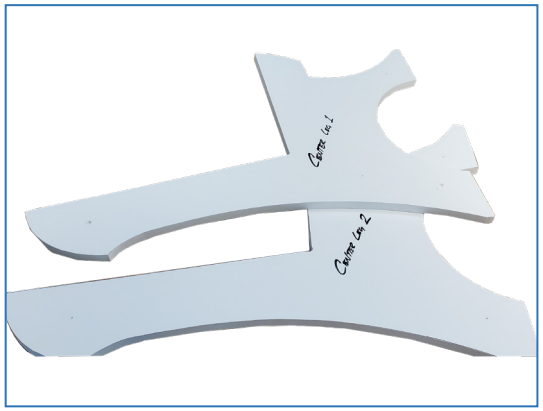

Laminate Legs

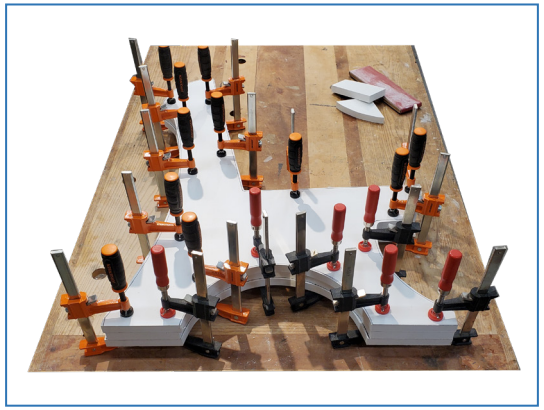

Step 2: Cut Bench Parts

2.1 – Cut Seat and Back to Size

Follow the drawing and cut the parts for the seat and back of the bench. Leave the smaller parts oversized so they can be trimmed to size during lamination process.

2.2 – Cutting the Arch

Use the same technique on the arch as used in creating the legs.

NOTE: link to arch layout:

https://www.youtube.com/watch?v=C-y_nr-O9Sk

2.3 – Aluminum Reinforcement

Cut grooves in the seat boards to accommodate the aluminum bars. A simple pass across the blade at the proper height. You will need to use a 2-part epoxy during the assembly of the lamination to adhere the aluminum to the PVC.

NOTE: the PVC glue will soften the material for a number of days, so be careful around the edges to not encounter squeeze out.

2.4 – Laminate Boards

Cut a spacer block to simulate the legs and use during the laminating assembly. We used PVC and instant adhesive to eliminate the need for metal fasteners.

Cut Seat and Back to Size

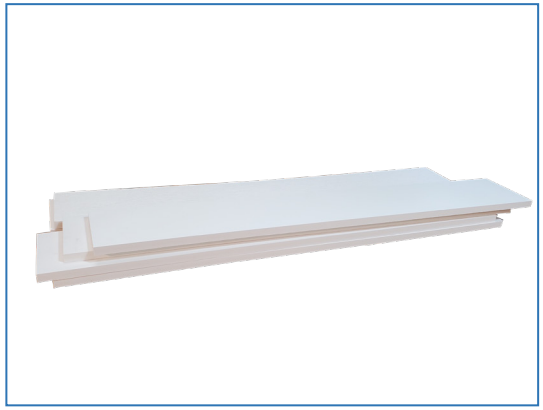

Cutting the Arch

Install the Interior Supports

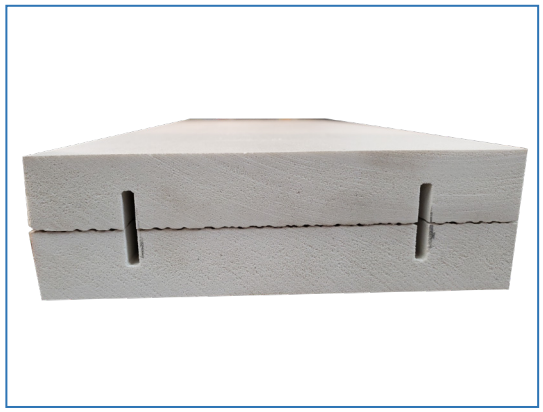

Attach Paper Cutter

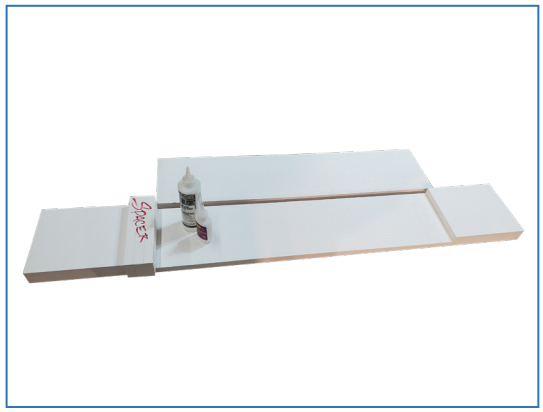

Step 3

3.1 – Finishing the Edges

The emboss will create an uneven seam line. To cover this, use all-purpose putty. After application and allotted cure time (15 min.) sand the edges with 220 grit sand paper to provide a smooth finish.

NOTE: if you're not painting the entire project, a light coat of fusion spray paint (white) will cover and protect the filler.

3.2 – Dry Fit

Clamp the seat and back to the legs for fit and mark the aluminum bar location on the legs. Dismantle the bench and cut slots in the legs for the aluminum with a jigsaw. Cut quality is not critical as it will be concealed in final assembly.

Finishing the Edges

Before and After

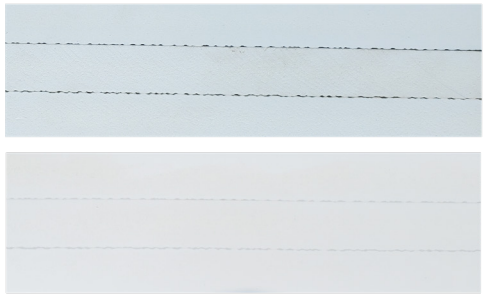

Dry Fit / Cut Legs for Supports

Step 4

4.1 – Final Assembly

For the fastening of the parts, use PVC glue and Cortex Screw and plugs. Clamp the back on to hold the legs in the proper position during seat assembly.

4.2 – Build Complete

After adhesive has cured the bench is ready to use.

Final Assembly

Detail of Fasteners

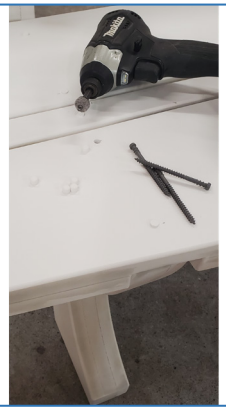

Build Complete

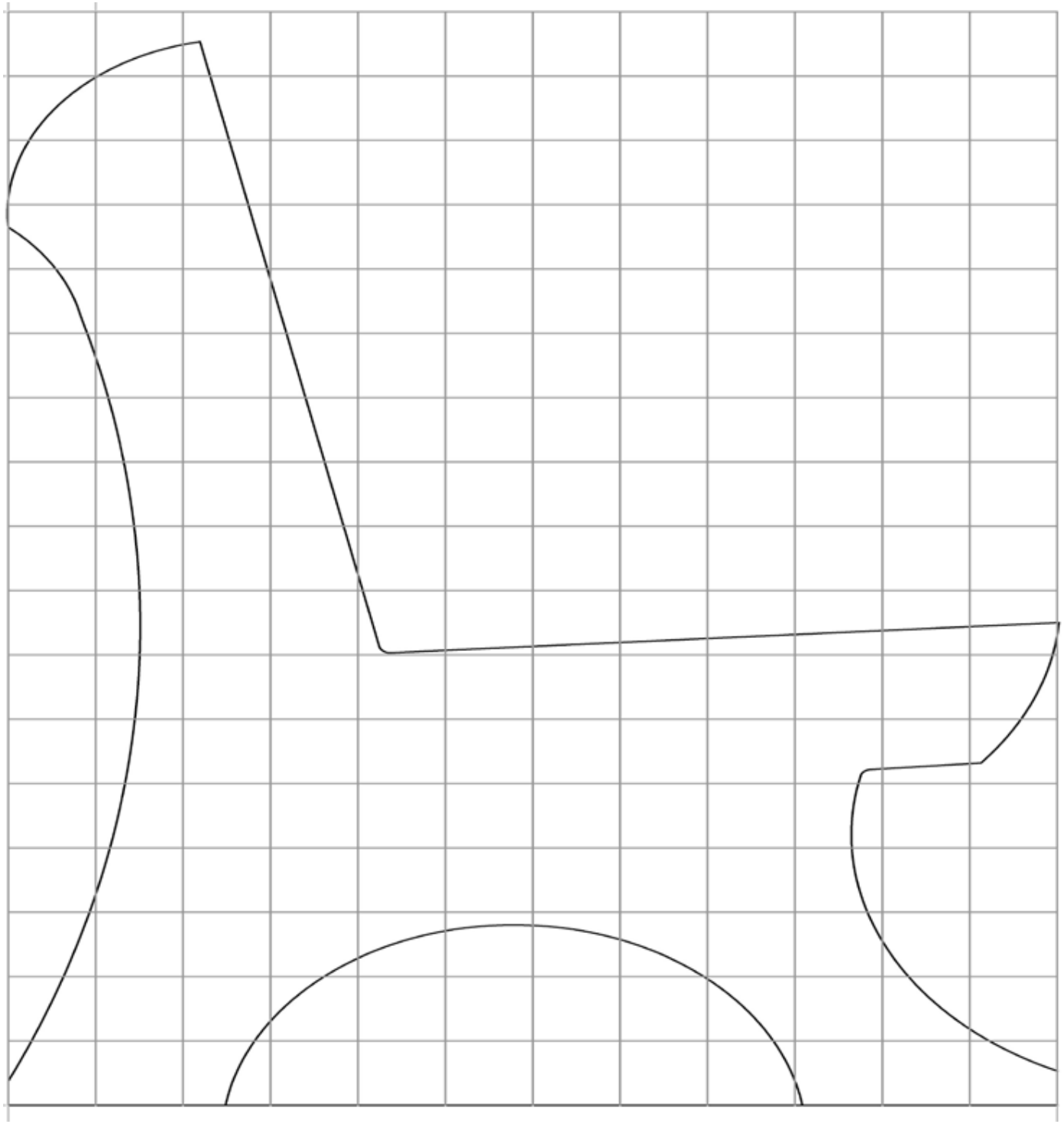

ROYAL® Building Products
A Westlake Company

RoyalBuildingProducts.com

1.855.ROYAL85